REV.	DESCRIPTION	DATE	BY	APP
A	PUT ON AUTOCAD, WHEELS WERE 3362	01/17/01	VP	RCW
B	B_1ADDED DIMENSION; B_2ADDED VIEW; B_3ADDED TORQUE NOTE; B_4ADDED NOTE 3	10/12/06	RWN	MRS

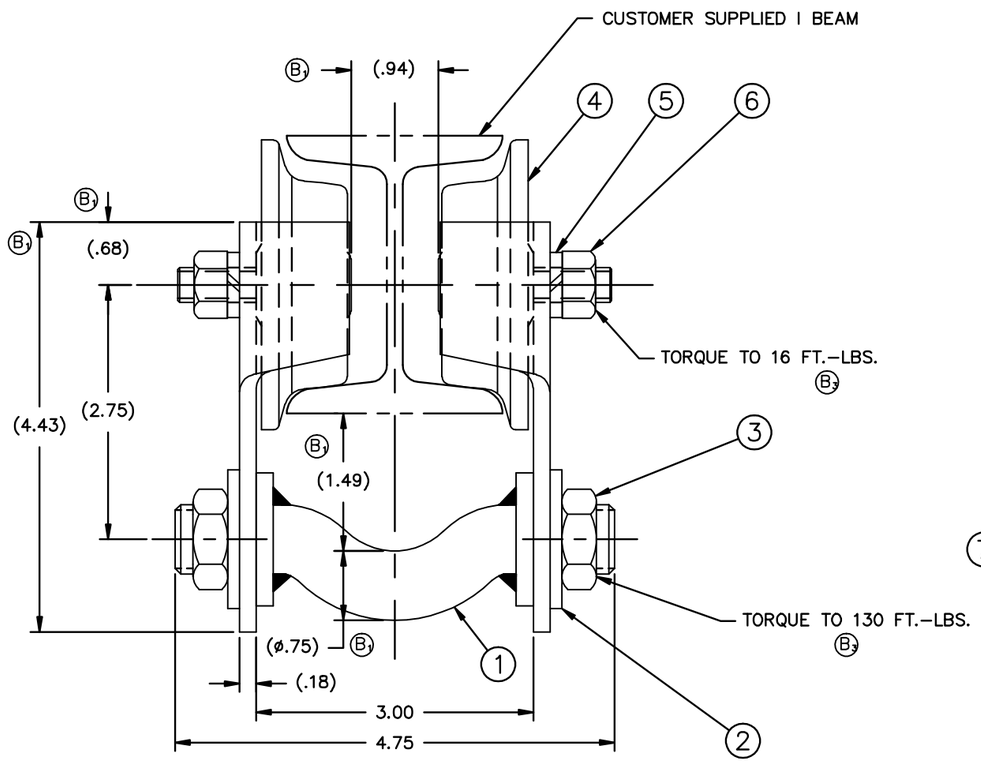

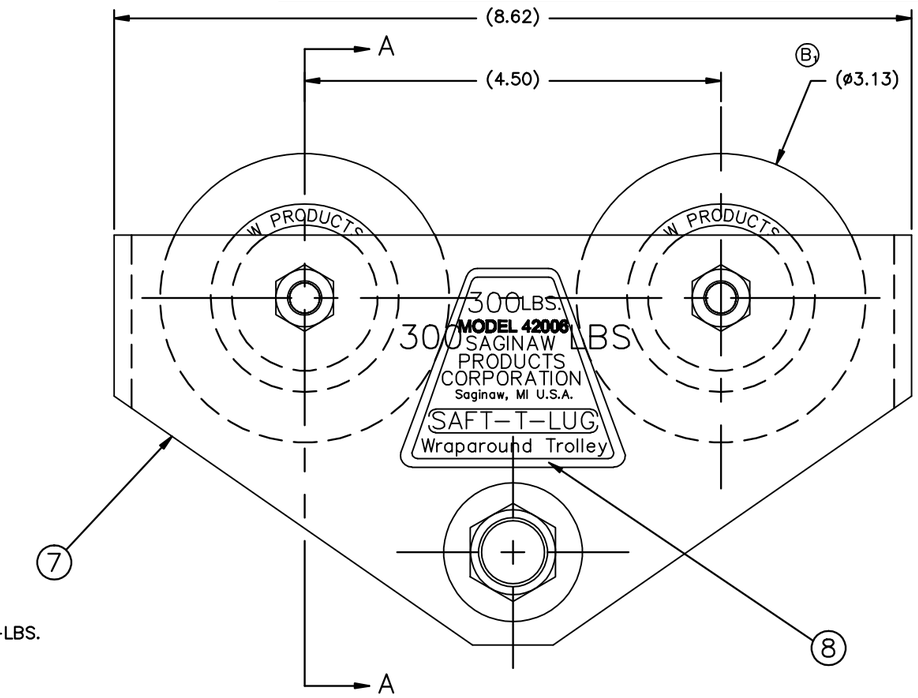

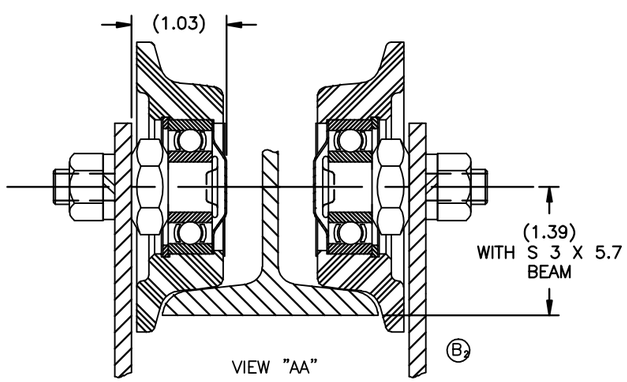

NOTES:

1. PLACE WASHERS AND LOCKNUT ON HANGER BAR. LOCKNUT TO BE FINGER TIGHT DO NOT ASSEMBLE SIDE PLATES ON HANGER BAR.
2. MINIMUM TURN RADIUS – 18" TO CENTERLINE OF BEAM. (SEE D–10465–3 FOR LAYOUT).
3. FITS ONLY THE S 3 X 5.7 I–BEAM

ITEM #	PART NUMBER	QTY	DESCRIPTION	MATERIAL OR NOTE	SPECIFICATION
8	43573	1	NAME PLATE	SELF–ADHESIVE TYPE	
7	43534	2	SIDE PLATE		
6	DD 3/8–24 HFN	4	NUT, HEX JAM	3/8–24 TH'D	
5	GG 3/8 ML	4	WASHER, LOCK	3/8 REG	
4	51455	4	TROLLEY WHEEL ASSEMBLY		
3	34050–50	2	3/4–10		
2	7466–2C	2	WASHER FLAT	1 1/2 OD X 49/64 ID X 1/8 TH.	
1	8147	1	HANGER BAR		

MATERIAL: SEE DETAILS

FINISH: PHOS COAT COML. QUALITY ON SIDE PLATES

DRAWN BY: DJH
CHECKED BY: GMS
ENGINEERING APPROVAL: MRS
DATE DRAWN: 5/14/80
CUSTOMER:

GEOMETRY CREATED IN AutoCAD

CIGNYS Multifaceted & Multifunctional Manufacturing www.cignys.com

DESCRIPTION: HOIST TROLLEY 300 LBS. CAPACITY

(A)

DIMENSIONS ARE IN INCHES UNLESS OTHERWISE SPECIFIED

TOLERANCES UNLESS OTHERWISE SPECIFIED

MACHINING & STAMPING OPERATIONS			WELDMENTS & SHEET METAL FABRICATIONS		
FRACTION	DECIMALS	ANGULAR	FRACTION	DECIMALS	ANGULAR
±1/16	.X ± .03 .XX ± .01 .XXX ± .005	±5°	±1/8	.XX ± .06 .XXX ± .03	±1°

NEXT ASSEMBLY	USED ON:

"THIS DRAWING AND THE SUBJECT MATTER ILLUSTRATED IS THE PROPERTY OF CIGNYS. THE DRAWING IS NOT TO BE COPIED IN PART OR WHOLE, DUPLICATED, REPRODUCED, USED BY PARTIES OTHER THAN CIGNYS TO MANUFACTURE THE SUBJECT MATTER ILLUSTRATED, OR SUBMITTED TO OTHER PARTIES WITHOUT THE EXPRESS WRITTEN AUTHORIZATION OF CIGNYS."

CODE IDENT NO. 52793 | DWG SIZE C | PART NUMBER / FILE NAME: 42006

SCALE: 1:1 | DO NOT SCALE DRAWING | SHEET: 1 of 1

REFERENCE: SHIPPING LABEL 42006, 43555, 42008, 8076, 8853, 8919, 8919–A