NOTICE—WHEN GOVERNMENT DRAWINGS, SPECIFICATIONS, OR OTHER DATA ARE USED FOR ANY PURPOSE OTHER THAN IN CONNECTION WITH A DEFINITELY RELATED GOVERNMENT PROCUREMENT OPERATION, THE UNITED STATES GOVERNMENT THEREBY INCURS NO RESPONSIBILITY NOR ANY OBLIGATION WHATSOEVER; AND THE FACT THAT THE GOVERNMENT MAY HAVE FORMULATED, FURNISHED, OR IN ANY WAY SUPPLIED THE SAID DRAWINGS, SPECIFICATIONS, OR OTHER DATA, IS NOT TO BE REGARDED BY IMPLICATION OR OTHERWISE AS IN ANY MANNER LICENSING THE HOLDER OR ANY OTHER PERSON OR CORPORATION, OR CONVEYING ANY RIGHTS OR PERMISSION TO MANUFACTURE, USE, OR SELL ANY PATENTED INVENTION THAT MAY IN ANY WAY BE RELATED THERETO.

SYM	REVISIONS	DATE	APPROVED
I	I_1 REDRAWN & REVISED, PUT ON CAD, I_2 2.56 WAS 2.66 (SALES DEPT REQT)	10-26-90	DJH GMS
J	ADDED NOTE #2	1/8/07	RWN / MRS

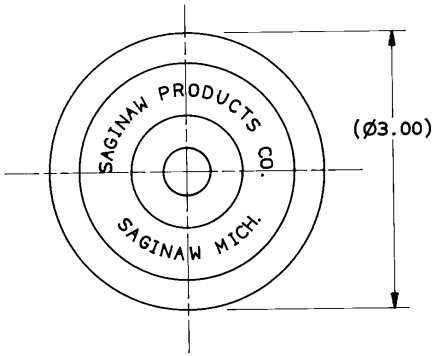

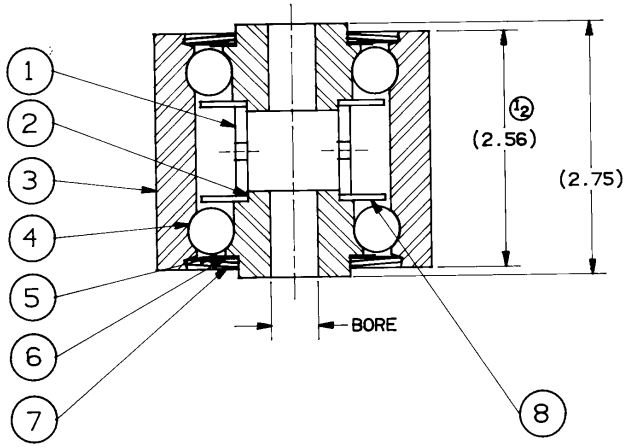

NOTE:

1. APPLY GREASE TO WASHER AND BALLS. USE SUNAPLEX EP 992 GREASE
2. (J) ALLOWABLE RADIAL LOADS: STATIC 3370 LBS, DYNAMIC 3690 LBS AT 33 RPM FOR 5000 HOURS

QTY REQD	ITEM	DWG SIZE	PART OR IDENTIFYING NO.	NOMENCLATURE OR DESCRIPTION	CODE IDENT	MATERIAL OR NOTE	SPECIFICATION
2	8	B	13-045288	WASHER			
2	7	B	01-042125	COVER			
2	6	B	01-042124	SHIM			
2	5	B	01-042123	WASHER, PLASTIC			
22	4	-	COML	BALL, STEEL, CARBON		1/2 DIA, GRADE 1000	
1	3	C	13-042534-1	SHELL			
2	2	C	SEE CHART	CONE			
1	1	C	13-044227-1	TUBE			

PART NO.	BORE	ITEM 2 (CONE)	REMARKS	NEXT ASS'Y	USED ON	QTY
13-042535-4	.765	13-044226-4				
13-042535-3	.640	13-044226-3				
13-042535-2	.578	13-044226-2				
13-042535-1	.515	13-044226-1				

UNLESS OTHERWISE SPECIFIED DIMENSIONS ARE IN INCHES

TOLERANCES
FRACTION ± 1/16
DECIMALS .X ± .06, .XX ± .03, .XXX ± .010
ANGLES ± 1°

MATERIAL

FINISH

DRAWN BY E. RENDON, JR.
CHECKED BY G. M. S
ENGR APPROVAL
CHIEF ENGR APPROVAL
ORG DATE DRAWN 9-20-76

SAGINAW PRODUCTS CORPORATION
68 WILLIAMSON ST. SAGINAW, MICHIGAN 48601 517-753-1411

I_1

ROLLER TURN ROLLER
SPECIALS 3" O.D. X 2.75 LG.

CODE IDENT. NO. 52793 | DWG SIZE C | 13-042535
SCALE 1/1 | SHEET

13-042535

BRUNING 44 131 52553

C-3112 CHARTED